KM 100/100 R P
KM 100/100 R LPG

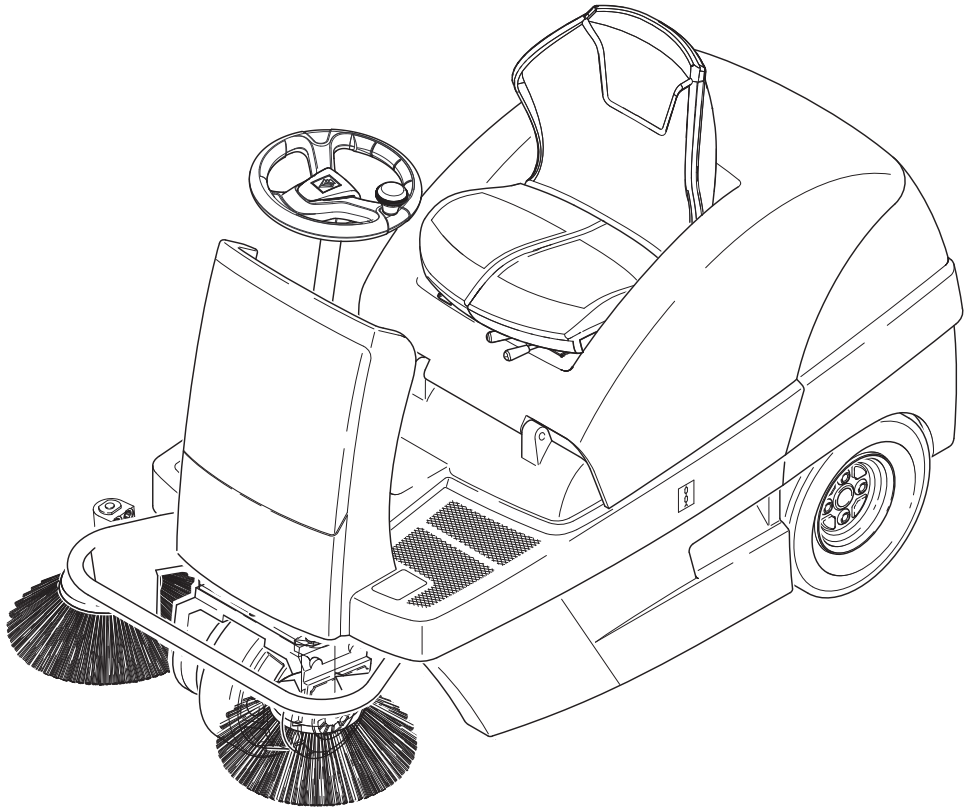

EN

59637400 (08/12)

Register and win!
www.kaercher.com

Please read and comply with these original instructions prior to the initial operation of your appliance and store them for later use or subsequent owners.
Before first start-up it is definitely necessary to read the safety indications Nr. 5.956-250!

Contents

Safety instructions	EN	1
Function	EN	2
Proper use	EN	3
Environmental protection	EN	3
Operating and Functional Elements	EN	4
Before Startup	EN	5
Start up	EN	5
Operation	EN	5
Shutdown	EN	7
Maintenance and care	EN	7
Troubleshooting	EN	12
Technical specifications	EN	13
EC Declaration of Conformity	EN	14
Warranty	EN	14
Accessories	EN	14

Safety instructions

General notes

Your sales outlet should be informed about any transit damage noted when unpacking the product.

- Warning and information plates on the machine provide important directions for safe operation.
- In addition to the information contained in the operating instructions, all statutory safety and accident prevention regulations must be observed.

Drive mode

⚠ ***Danger***

Risk of injury!
Danger of tipping if gradient is too high.
- *The gradient in the direction of travel should not exceed 18%.*

Danger of tipping when driving round bends at high speed.
- *Drive slowly when cornering.*

Danger of tipping on unstable ground.
- *Only use the machine on sound surfaces.*

Danger of tipping with excessive sideways tilt.
- *The gradient perpendicular to the direction of travel should not exceed 15%.*
- It is important to follow all safety instructions, rules and regulations applicable for driving motor vehicles.
- The operator must use the appliance properly. He must consider the local conditions and must pay attention to third parties, in particular children, when working with the appliance.
- The appliance may only be used by persons who have been instructed in handling the appliance or have proven qualification and expertise in operating the appliance or have been explicitly assigned the task of handling the appliance.
- The appliance must not be operated by children, young persons or persons who have not been instructed accordingly.
- It is strictly prohibited to take co-passengers.
- Ride-on appliances may only be started after the operator has occupied the driver's seat.

➔ Please remove the key, when not in use, to avoid unauthorised use of the appliance.

➔ Never leave the machine unattended so long as the engine is running. The operator may leave the appliance only when the engine has come to a standstill, the appliance has been protected against accidental movement, and the key has been removed.

Accessories and Spare Parts

⚠ ***Danger***

To avoid risks, all repairs and replacement of spare parts may only be carried out by authorized customer service personnel.
- Only use accessories and spare parts which have been approved by the manufacturer. The exclusive use of original accessories and original spare parts ensures that the appliance can be operated safely and trouble free.
- At the end of the operating instructions you will find a selected list of spare parts that are often required.
- For additional information about spare parts, please go to the Service section at www.kaercher.com.

Symbols on the machine



Please do not sweep away any burning substances such as cigarettes, match sticks or similar objects.



Risk of being squeezed or hurt at the belts, side-brushes, containers, machine cover.

Symbols in the operating instructions

⚠ ***Danger***

Immediate danger that can cause severe injury or even death.

⚠ ***Warning***

Possible hazardous situation that could lead to severe injury or even death.

Caution

Possible hazardous situation that could lead to mild injury to persons or damage to property.

Safety Guidelines for liquified gas vehicles (only KM 100/100 R LPG)

Hauptverband der gewerblichen Berufsgenossenschaften e.V. (HVBG). Liquified gases (propellants) are butane and propane or a mixture of butane/propane. They are available in special cylinders. The operating pressure of these gases depends on the outside temperature.

⚠ ***Danger***

Risk of explosion! Do not handle liquified gas like petrol. Petrol evaporates slowly, liquified gas immediately turns into gas. The risk of gas spreading in the room and getting ignited is thus higher in case of liquefied gas than in petrol.

⚠ ***Danger***

Risk of injury! Use only liquefied gas cylinders with propellant filled according to DIN 51622 of A or B quality, depending on the surrounding temperature.

Caution

Use of cooking gas is strictly prohibited. For the gas engine, use only liquid gas mixtures of propane/ butane or their mixtures where the mixing ratio lies between 90/10 to 30/70. On account of better cold start behaviour even at low outside sub-zero temperatures (below 0° C / 32 °F) always prefer a mixture with a higher propane share because evaporation takes place even at low temperatures.

Liabilities of the factory management and the employee

- All persons handling liquid gases are liable to acquaint themselves with the special properties of the liquefied gases for hazard-free handling of operations. The current documentation is always to be kept with the sweeper.

Maintenance by expert

- Propellant-operated units are to be checked at regular intervals, at least once a year, by an expert against leaks (according to BGG 936) and ensure that the unit is functioning properly.
- The inspection must be certified and documented. The inspection guidelines are § 33 and § 37 UVV (occupation accident prevention regulations) "Use of liquid gas" (BGV D34).
- General applicable regulations are the guidelines for inspecting vehicles whose engines are driven by liquefied gases of the Federal Transportation Minister.

Commissioning/Operations

– Gas must always be drawn only from one cylinder. Drawing gas from multiple cylinders simultaneously can cause liquid gas from one cylinder flowing into the other. This causes the over-filled cylinder to be subjected to an unpermitted excess pressure when the cylinder valve is closed later (refer B.1 of these guidlines).
– Ensure the correct positioning of the cylinder with the "top" marking while connecting a full cylinder (the connection screw points vertically upward).

Replace cylinders carefully. While connecting and disconnecting the gas cylinders, the gas outlets of the cylinder valve must be closed properly by tightening the locking nuts with a spanner.

– Discontinue the use of leaky gas cylinders. Such cylinders are to be emptied by slowly letting out the gas in open spaces by conforming to all safety regulations and are to be indicated as leaky. Also inform the issuing company or its representative (the filling-station attendant) in writing about the damage to the cylinder while delivering or receiving the cylinders.
– Before connecting the gas cylinder, check that its connection neck is in a proper state.
– After connecting the cylinder, regularly check that it is not leaky by using a foaming agent.
– Open the valves slowly. Do not use hammers to open and close the cylinders.
– Use only dry fire extinguishers (with carbonic acid gas) in case of fire caused by liquefied gases.
– The entire LPG unit must be continuously checked to ensure that there are no leaks and the unit is functioning properly. Using the vehicle with a leaky gas unit is strictly prohibited.
– First close the cylinder valve before loosening the pipe or tube connection. Unscrew and loosen the connection nut of the gas cylinder slowly because otherwise the gas under pressure in the tube will flow out instantly.
– If the gas is refilled from a larger tank, then ask the sales agent of the LPG about the important regulations to be followed.

⚠ ***Danger***

Risk of injury!

– *LPG in a liquid state can cause frost bites on bare skin.*
– *After disconnecting the cylinder, tighten the closing nut firmly on the connecting threading of the cylinder.*
– *Use soap water or some such foaming agent to check whether the cylinder is leaking. The use of open flames to illuminate the LPG unit is strictly prohibited.*
– *Follow the manufacturer's installation specifications while changing individual parts of the LPG unit. Close all cylinder and locking valves while doing so.*
– *Regularly check the status of the electrical unit of the LPG vehicles . Sparks can cause explosions if the gas-carrying parts of the unit are leaky.*
– *If a LPG-driven vehicle has been idling for a long time, then first ventilate the setting room before commissioning the vehicle or its electrical unit.*
– *Immediately inform the trade association and the concerned trade supervisory authority about accidents with gas cylinders or LPG units. Store the damaged parts carefully until all investigations have been completed.*

In the installation and storage rooms as well as the workshops

– Propellants or LPG cylinders must always be stored according to the regulations of TRF 1996 (Technical Regulations for Liquid Gases, refer DA to BGV D34, Appendix 4).
– Always store the gas cylinders in a vertical position. Use of open flames and smoking at the installation site of the cylinders and during repairs is strictly prohibited. Protect the stored cylinders against unauthorised access. Close all empty cylinders properly.
– Close the cylinder and main locking valves immediately when you switch off the vehicle.
– Follow the regulations for garages and the construction guidelines of the respective State about the location and structure of the parking areas for LPG-driven vehicles.
– Gas cylinders are to be stored in separate rooms away from the parking areas (refer DA to BGV D34, Appendix 2).
– The electrical hand-held lamps used in the rooms are to be equipped with closed, sealed case and a strong protection cover.
– Close all cylinder and main valves before working in repair workshops and protect the gas cylinders against effect of external heat.
– A responsible person must check that all valves, especially the cylinder valves, are closed during operational breaks and before closing the factory. Do not carry out any jobs involving fire - such as cutting and welding jobs - in the vicinity of the gas cylinders. Do not store gas cylinders, not even empty ones, in the workshops.
– The parking and storage rooms and the repair workshops must be ventilated properly. Please note that liquefied gases are heavier than atmospheric air. They get collected on the floor, in recesses and other holes in the floors and form a gas-air mixture that can lead to explosions.

Function

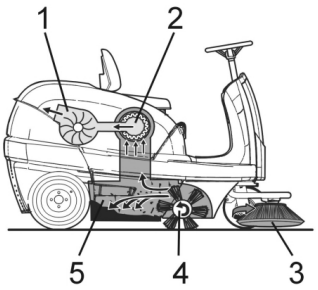

The sweeper operates using the overthrow principle.

– The side brushes (3) clean the corners and edges of the surface, moving dirt and debris into the path of the roller brush.
– The rotating roller brush (4) moves the dirt and debris directly into the waste container (5).
– The dust raised in the container is separated by the dust filter (2) and the filtered clean air is drawn off by the suction fan (1).

Proper use

Use this sweeper only as directed in these operating instructions.

➔ The machine with working equipment must be checked to ensure that it is in proper working order and is operating safely prior to use. Otherwise, the appliance must not be used.

– This sweeper has been designed to sweep dirt and debris from indoor as well as outdoor surfaces.
– The machine is not suitable for being driven on public roads.
– The machine is not suitable for vacuuming dust which endangers health.
– The machine may not be modified.
– Never vacuum up explosive liquids, combustible gases or undiluted acids and solvents. This includes petrol, paint thinner or heating oil which can generate explosive fumes or mixtures upon contact with the suction air. Acetone, undiluted acids and solvents must also be avoided as they can harm the materials on the machine.
– Do not sweep/vacuum up any burning or glowing objects.
– The machine is only suitable for use on the types of surfaces specified in the operating instructions.
– The machine may only be operated on the surfaces approved by the company or its authorised representatives.
– The machine may not be used or stored in hazardous areas. It is not allowed to use the appliance in hazardous locations.
– The following applies in general: Keep highly-flammable substances away from the appliance (danger of explosion/fire).

Suitable surfaces

– Asphalt
– Industrial floor
– Screed
– Concrete
– Paving stones
– Carpet

Environmental protection

	The packaging material can be recycled. Please do not throw the packaging material into household waste; please send it for recycling.
	Old appliances contain valuable materials that can be recycled; these should be sent for recycling. Batteries, oil, and similar substances must not enter the environment. Please dispose of your old appliances using appropriate collection systems.

Notes about the ingredients (REACH)
You will find current information about the ingredients at:
www.kaercher.com/REACH

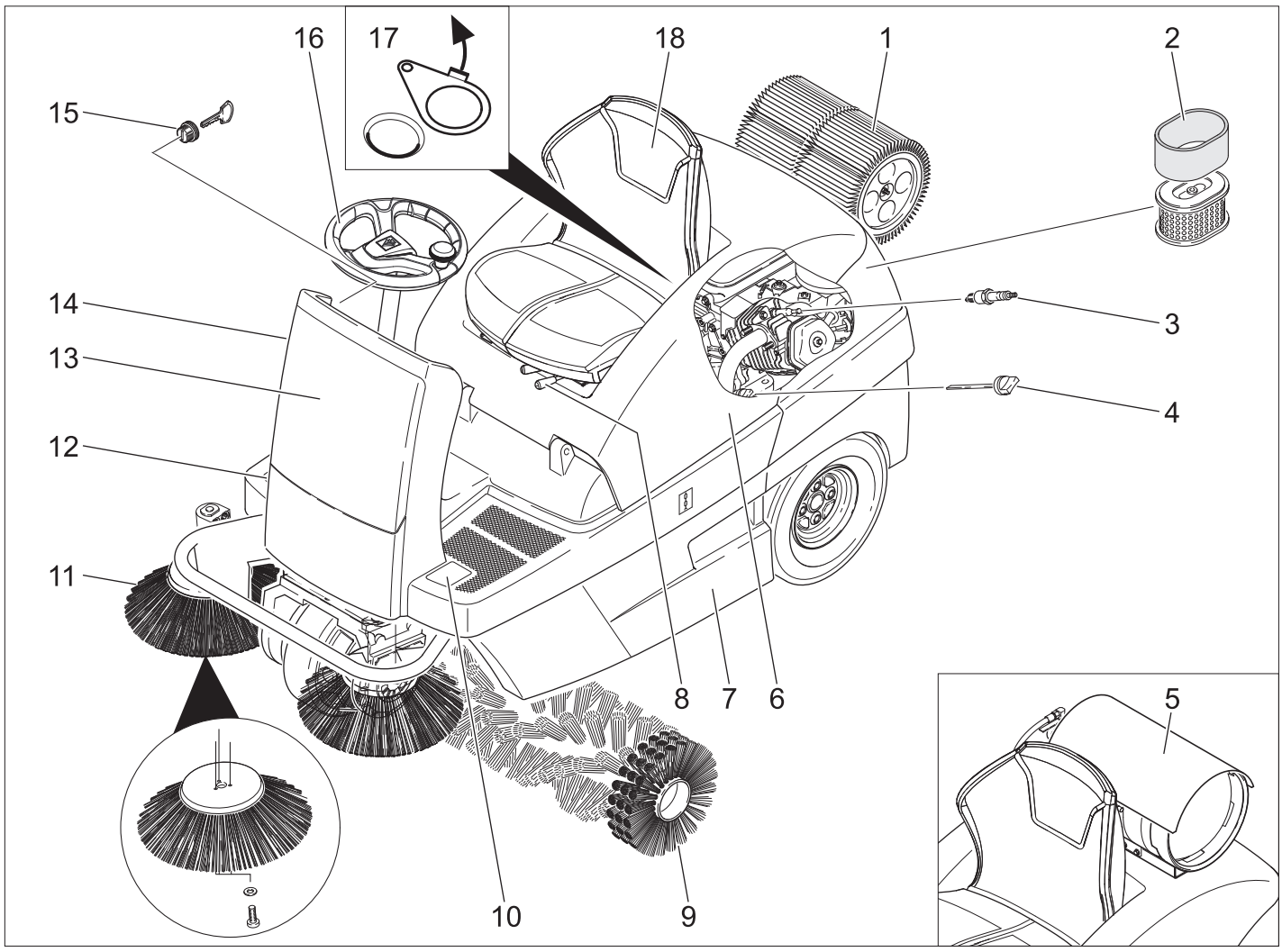

1 Dust filter
2 Air filter insert
3 Spark plug
4 Oil dipstick
5 Gas cylinder (only KM 100/100 R LPG)
6 Cover
7 Waste container (both sides)
8 Lever for seat adjustment
9 Roller brush
10 Pedal for raising/lowering bulk waste flap
11 Side brushes
12 Drive pedal
13 Front panel
14 Choke (cold start)
15 Ignition lock
16 Steering wheel
17 Wet/dry flap
18 Seat (with seat contact switch)

Operator console

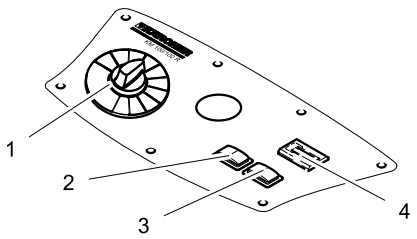

1 Programme switch
2 Filter dedusting
3 Horn
4 Operating hour counter

Colour coding

– The operating elements for the cleaning process are yellow.
– The controls for the maintenance and service are light gray.

Open/ close device hood

⚠ ***Danger***

Danger of crushing while closing the machine cover. Hence, lower the machine cover slowly.

➔ Open the device hood at the handle slot (pull it upward).



➔ Pull the holding bar from the holder.

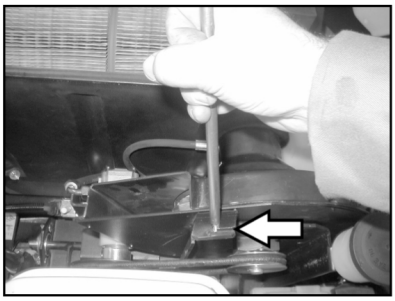

➔ Insert the holder bar into the intake on the suction fan.

➔ To close the appliance hood, pull the holder bar out of the intake and lock the holder into the appliance hood.

Before Startup

Unloading

⚠ ***Danger***

Risk of injury and damage! Do not use a forklift to unload the appliance.

To unload the machine, proceed as follows:

➔ Cut plastic packing belt and remove foil.

➔ Remove the elastic tape fasteners at the stop points.

➔ Four indicated floor boards of the pallet are fastened with screws. Unscrew these boards.

➔ Place the boards on the edge of the pallet. Place the boards in such a way that they lie in front of the four wheels of the machine. Fasten the boards with screws.

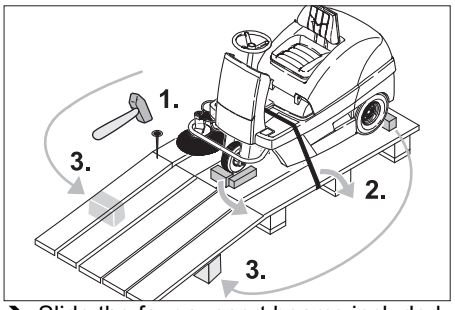

➔ Slide the four support beams included in the packaging under the ramp.

➔ Remove the wooden blocks used for arresting the wheels and slide them under the ramp.

Moving sweeper without engaging self-propulsion

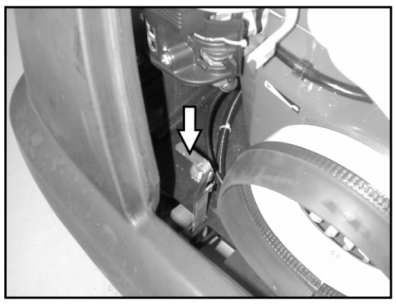

⚠ ***Danger***

Risk of injury! Before engaging the freewheel operation, the machine must be secured to prevent it rolling away.

➔ Opening and securing cover

➔ Engage freewheel lever in upper hole.

This blocks the travel drive function.

➔ Close cover.

The machine can now be pushed.

Note

Do not move the machine for long distances without engaging self-propulsion, a speed of 6 km/h should not be exceeded.

Moving sweeper by engaging self-propulsion

➔ Engage freewheel lever in lower hole.

The travel drive is now ready for operation.

➔ Close cover.

The appliance can now be driven.

Start up

General notes

➔ Park the sweeper on an even surface.

➔ Remove the key.

Connect/ change gas cylinder (only KM 100/100 R LPG)

⚠ ***Warning***

Only use replacement cylinders with 11 kg contents of tested models.

⚠ ***Danger***

Risk of injury!

- *Follow safety regulations for LPG vehicles.*
- *Formation of crusts and yellow-frothing deposits on the gas cylinder indicate leakiness.*
- *Cylinders must be changed only by instructed persons.*
- *Cylinders containing propellant gases must not be changed in garages and underground areas.*
- *Do not smoke and use uncovered light while changing the cylinder.*
- *While changing cylinders, first close the locking valve of the LPG cylinder firmly and immediately put the protective cap on the empty cylinder.*

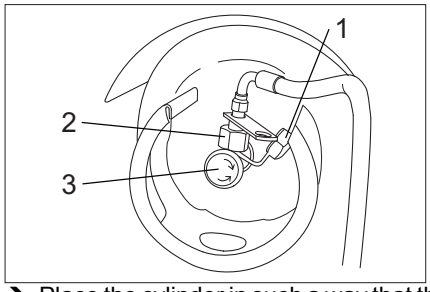

➔ Place the cylinder in such a way that the connection threading of the locking valve vertically points upwards.

➔ Close the bracket closure.

➔ Attach safety splint.

➔ Remove protective lid (1) from the connection valve of the cylinder.

➔ Connect the gas tube with Union nut (2) (use 30 mm spanner).

Note

Connection has a left threading.

⚠ ***Warning***

Open the gas drawing valve (3) only after starting the appliance (refer chapter Starting the appliance).

⚠ ***Warning***

Danger through escaping gas. Route/attach the gas hose so that it does not protrude outside the appliance and cannot be torn off during operation.

Fueling (KM 100/100 R P only)

Refuelling the machine

⚠ ***Danger***

Risk of explosion!

- *Only use the fuels specified in the Operations Manual.*
- *Do not refuel the machine in enclosed spaces.*
- *Smoking and naked flames are strictly prohibited.*
- *Ensure that no fuel reaches the hot open surfaces.*

➔ Switch off engine.

➔ Opening and securing cover



➔ Check fuel level via the tank indicator.

➔ Open fuel filler cap.

➔ KM 100/100 R P: Use regular unleaded petrol.

➔ Fill tank to max. 1 cm below the lower edge of the filler nozzle.

➔ Wipe off any spilt fuel, remove funnel and close fuel filler cap.

➔ Close cover.

Operation

Adjusting driver's seat

➔ Pull seat adjustment lever inwards.

➔ Slide seat, release lever and lock in place.

➔ Check that the seat is properly locked in position by attempting to move it backwards and forwards.

Programme selection

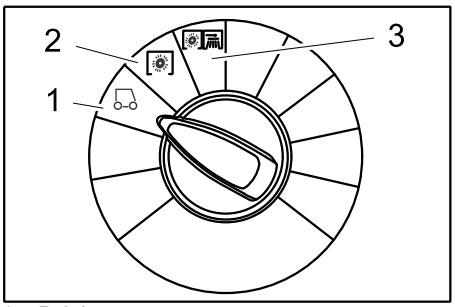

1 Driving
Driving to the Place of Use.

2 Sweeping with sweep roller
Roller brush is lowered. The roller brush and the side brush will rotate.

3 Sweeping with side brushes
Roller brush and side brushes are lowered.

Starting the machine

Note

The machine is equipped with a seat contact mat. If the driver's seat is vacated, the appliance is switched off and the immobilising brake is activated automatically.

Open the fuel tap (KM 100/100 R P only)

➔ Opening and securing cover

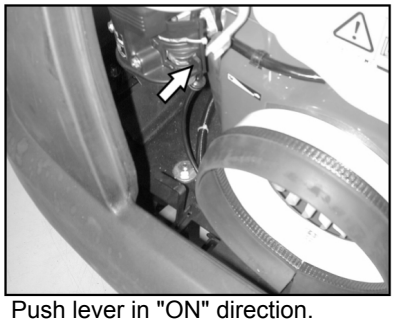

➔ Push lever in "ON" direction.

➔ Close cover.

Open gas supply (only KM 100/100 R LPG)

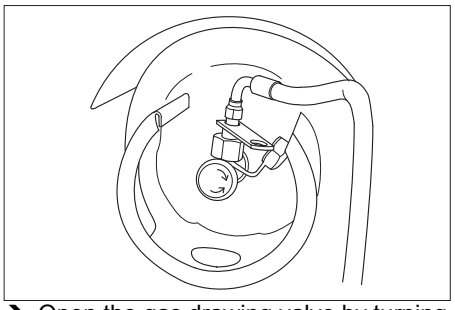

➔ Open the gas drawing valve by turning it in anti-clockwise direction.

Starting the machine

➔ Sit on the driver's seat.

➔ Do NOT press the accelerator pedal.

➔ Set programme switch to step 1 (driving).

KM 100/100 R P only



➔ Press choke lever downwards. Once the engine is running, pull choke lever back up.

KM 100/100 R LPG only

➔ Press the remote button, once the motor runs, release the remote button

➔ Turn ignition key past position 1.

➔ If the machine starts, release the ignition key.

Note

Never operate the starter motor for longer than 10 seconds. Wait at least 10 seconds before operating the starter motor again.

Drive the machine

⚠ ***Danger***

Danger of falling! Do not stand up while driving.

Drive forward



➔ Press slowly the accelerator pedal "forward".

Reverse drive

⚠ ***Danger***

Risk of injury! While reversing, ensure that there is nobody in the way, ask them to move if somebody is around.



➔ Press slowly the accelerator pedal "reverse".

Note

Driving method

– The accelerator pedal can be used to vary the driving speed infinitely.

– Avoid pressing the pedal suddenly as this may damage the hydraulic system.

– In the event of power loss on inclined surfaces, slightly reduce the pressure on the accelerator pedal.

Brakes

➔ Release the accelerator pedal, the machine brakes automatically and stops.

Driving over obstacles

Driving over fixed obstacles which are 50 mm high or less:

➔ Drive forwards slowly and carefully.

Driving over fixed obstacles which are more than 50 mm high:

➔ Only drive over these obstacles using a suitable ramp.

Sweeping mode

⚠ ***Danger***

Risk of injury! If the bulk waste flap is open, stones or gravel may be flung forwards by the roller brush. Make sure that this does not endanger persons, animals or objects.

Caution

Do not sweep up packing strips, wire or similar objects as this may damage the sweeping mechanism.

Caution

To avoid damaging the floor, do not continue to operate the sweeping machine in the same position.

Note: To achieve an optimum cleaning result, the driving speed should be adjusted to take specific situations into account.

Note: During operation, the waste container should be emptied at regular intervals.

Note: When cleaning surfaces, only lower the roller brush.

Note: Also lower side brush when cleaning along edges.

Sweeping with sweep roller

➔ Set programme switch to step 2. Roller brush is lowered. The roller brush and the side brush will rotate.

Sweeping with bulk waste flap raised

Note: The bulk waste flap must be raised briefly to sweep up larger items (up to 60 mm high), e.g. soft drink cans.

Raising bulk waste flap:

➔ Press the pedal for the bulk waste flap forwards and keep pressed down.

➔ To lower it, take foot off pedal.

Note: An optimum cleaning result can only be achieved if the bulk waste flap has been lowered completely.

Sweeping with side brushes

➔ Set programme switch to step 3. Side brushes and roller brush are lowered.

Note: Roller brush and side brush start operating automatically.

Sweeping dry floors
Note: During operation, the waste container should be emptied at regular intervals.
Note: During operation, the dust filter should be shaken off and cleaned at regular intervals.



➔ Close wet/dry flap

Sweep in fibrous and dry waste (such as dry grass, hay)
➔ Open wet/dry flap.
Note: You can thus preven the filter system from getting blocked.

Sweeping damp or wet floors
➔ Open wet/dry flap.
Note: This protects the filter from moisture.

Filter dedusting
– Switch on manual filter shake off.

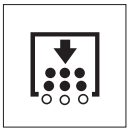

➔ Press Filter shake off button. The filter will be cleaned for 15 seconds.

Emptying waste container

Note: Wait until the filter shaking process is finished and the dust has settled before you open or empty the waste container.
➔ Raise the waste container slightly and pull it out.
➔ Empty waste container.
➔ Push in the waste container and lock it.
➔ Empty opposite waste container.

Turn off the appliance

➔ Set programme switch to step 1 (driving). The side brush and roller brush are raised.
➔ Turn ignition key to "0" and remove it.
Note: Once the machine has been switched off, the dust filter is shaken automatically for approx. 15 seconds. Do not open the machine hood during this period.
Note: The machine has been fitted with an automatic parking brake that is activated as soon as the engine is switched off and the driver leaves his seat.
KM 100/100 R P only

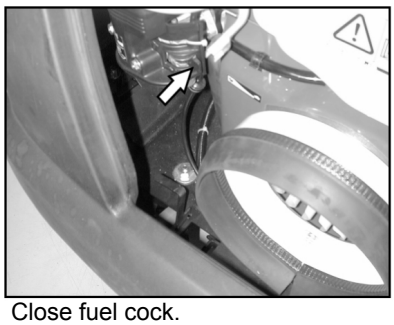

➔ Close fuel cock.

KM 100/100 R LPG only

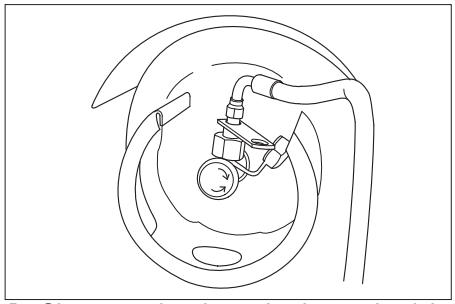

➔ Close gas drawing valve by turning it in clock-wise direction.

Transport

⚠ ***Danger***
Risk of injury and damage! Observe the weight of the appliance when you transport it.
➔ Turn ignition key to "0" and remove it.
➔ Secure the wheels of the machine with wheel chocks.
➔ Secure the machine with tensioning straps or cables.
➔ When transporting in vehicles, secure the appliance according to the guidelines from slipping and tipping over.



Note: Observe markings for fixing points on base frame (chain symbols). When loading or unloading the machine, it may only be operated on gradients of max. 18%.
KM 100/100 R P only
➔ Close fuel cock.
➔ Empty fuel tank.
KM 100/100 R LPG only
➔ Close gas drawing valve by turning it in clock-wise direction.
➔ Remove the gas bottle and dispose of according to the applicable rules and regulations.

Storage

⚠ ***Danger***
Risk of injury and damage! Note the weight of the appliance in case of storage.

Shutdown

If the sweeper is going to be out of service for a longer time period, observe the following points:
➔ Park the sweeper on an even surface.
➔ Set programme switch to step 1 (driving). The roller brush and side brushes are raised to prevent the bristles being damaged.
➔ Turn ignition key to "0" and remove it.
➔ Lock the sweeper to ensure that it does not roll off.
➔ Clean the inside and outside of the sweeper.
➔ Park the machine in a safe and dry place.
KM 100/100 R P only
➔ Fill fuel tank and close fuel cock.
KM 100/100 R LPG only
➔ Close gas drawing valve by turning it in clock-wise direction.
➔ Remove the gas bottle and dispose of according to the applicable rules and regulations.
All motor models:
➔ Change the engine oil
➔ Unscrew spark plugs and pour approx. 3 cm³ of oil into the spark plug hole. Crank the engine several times before replacing the spark plug. Screw in the spark plug.
➔ Disconnect battery.
➔ Charge battery approx. every 2 months.

Maintenance and care

General notes

➔ First switch off the appliance, remove the key and remove the battery plug or disconnect the battery before performing any cleaning or maintenance tasks on the appliance, replacing parts or switching over to another function.
➔ Pull out the battery plug or clamp the battery while working on the electrical unit.
– Maintenance work may only be carried out by approved customer service outlets or experts in this field who are familiar with the respective safety regulations.
– Mobile appliances used for commercial purposes are subject to safety inspections according to VDE 0701.

– Use only roller brushes/ side-brushes that are provided with the appliance or specified in the Operations Manual. The use of other roller brushes/ side-brushes can affect the safety of the appliance.

Cleaning

Caution

Risk of damage! Do not clean the appliance with a water hose or high-pressure water jet (danger of short circuits or other damage).

Cleaning the inside of the machine

⚠ ***Danger***

Risk of injury! Wear dust mask and protective goggles.

➔ Open the hood, insert retaining rod.
➔ Clean machine with a cloth.
➔ Blow through machine with compressed air.
➔ Close cover.

Note: The dust filter can be rinsed with water. Dry the filter completely before reusing it.

External cleaning of the appliance

➔ Clean the machine with a damp cloth which has been soaked in mild detergent.

Note: Do not use aggressive cleaning agents.

Maintenance intervals

Note: The elapsed-time counter shows the timing of the maintenance intervals.

Maintenance by the customer

Daily maintenance:
➔ Check the sweeping roller and the side brush for wear and wrapped belts.
➔ Check tyre pressure.
➔ Check function of all operator control elements.

Weekly maintenance:
➔ Check for smooth running of the Bowden cables and the moveable parts
➔ Check the sealing strips in the sweeping area for position and wear.
➔ Check dust filter and clean filter box, if required.
➔ Check the vacuum pressure system.

Maintenance to be carried out every 100 operating hours:
➔ Check function of seat contact switch.
➔ Check tension, wear and function of drive belts (V-belt and circular belt).

Maintenance following wear:
➔ Replace sealing strips.
➔ Replace roller brush.
➔ Replace side brush.

Note: For description, see section on Maintenance work.

Note: Where maintenance is carried out by the customer, all service and maintenance work must be undertaken by a qualified specialist. If required, a specialised Kärcher dealer may be contacted at any time.

Maintenance by Customer Service

Maintenance to be carried out after 8 operating hours:
➔ Carry out initial inspection.

Maintenance to be carried out after 20 operating hours
Maintenance to be carried out every 100 operating hours
Maintenance to be carried out every 300 operating hours
Maintenance to be carried out every 500 operating hours
Maintenance to be carried out every 1000 operating hours
Maintenance to be carried out every 1500 operating hours

Note: In order to safeguard warranty claims, all service and maintenance work during the warranty period must be carried out by the authorised Kärcher Customer Service in accordance with the maintenance booklet.

Maintenance Works

Preparation:
➔ Park the sweeper on an even surface.
➔ Turn ignition key to "0" and remove it.

General notes on safety

⚠ ***Danger***

Risk of injury!
The engine requires 15 seconds to come to a standstill once it has been switched off. Do not open the appliance hood during that period.

⚠ ***Danger***

Risk of injury! Allow the machine sufficient time to cool down before carrying out any maintenance and repair work.

Check gas filter (only KM 100/100 R LPG)

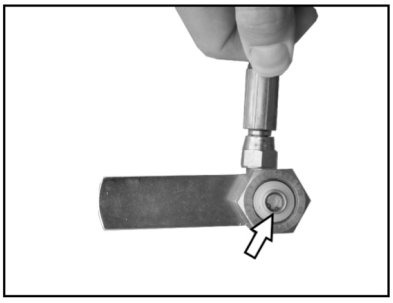

➔ Check gas filter in the screw to gas cylinder to see if it is dirty.
➔ Clean dirty filters with compressed air.

Check gas connections (only KM 100/ 100 R LPG)

➔ Check gas connections, pipes and evaporators using leak-search spray for leaks.

Note

Leaks in the gas cylinder cause formation of crusts or yellow frothy deposits on the gas connections, pipes and evaporator. Contact Kärcher Customer Service for maintenance of the gas unit.

Check the tyre pressure

➔ Park the sweeper on an even surface.
➔ Connect air pressure testing device to tyre valve.
➔ Check air pressure and adjust if required.
➔ Set air pressure for the rear tyres to 6 bar.

Replacing wheel

⚠ ***Danger***

Risk of injury!

➔ Park the sweeper on an even surface.
➔ Remove the key.
➔ When carrying out repairs on public highways, wear warning clothing when working close to passing traffic.
➔ Check stability of ground. Also secure the machine with wheel chock(s) to prevent it rolling away.

Check tyres
➔ Check tyre contact face for foreign objects.
➔ Remove objects found.
➔ Use suitable, commercially available materials to carry out tyre repairs.

Note: Observe the manufacturer's recommendations. The journey may be resumed providing that the directions supplied by the product manufacturer have been observed. The tyre/wheel change should nonetheless be carried out as soon as possible.

➔ Raise slightly the waste container on the appropriate side and pull it out.
➔ Loosen the wheel screw.
➔ Install the jack.



Intake point for the jack (rear wheels)

➔ Raise machine using vehicle jack.
➔ Remove the wheel screw.
➔ Remove wheel.
➔ Mount spare wheel.
➔ Screw in the wheel screw.
➔ Lower machine using vehicle jack.
➔ Tighten the wheel screw.
➔ Push in the waste container and lock it.

Note: Use a suitable commercially available vehicle jack.

Check the vacuum pressure system

– The sweeping system is activated by means of a vacuum pressure system.
– If the side brush or the roller brush cannot be lowered, the vacuum pressure sockets must be checked for proper connection of the hoses, connect the appropriate hose if necessary.
– If the side brush or the roller brush still cannot be lowered, the vacuum pressure system has a leak. In this case, consult Customer Service.

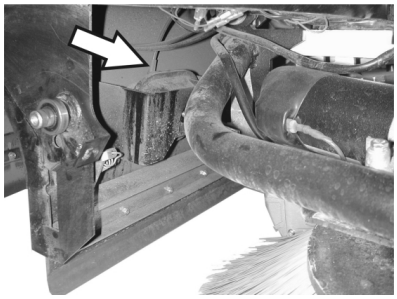

Hose connection at the vacuum pressure socket of the side brush lowering system

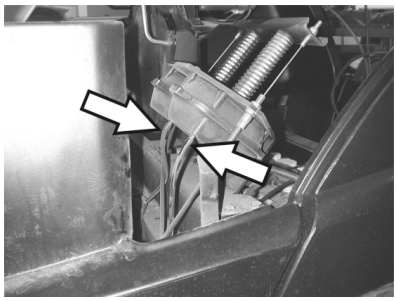

Hose connections at the vacuum pressure sockets of the roller brush lowering system

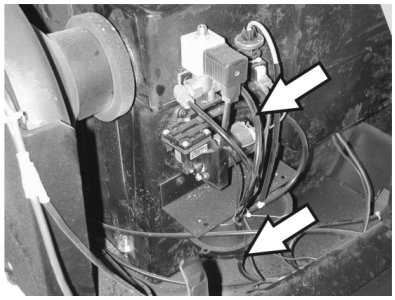

Hose connections at vacuum pressure pump and vacuum pressure socket (accumulator)

Note: The vacuum pressure pump runs only while the vacuum pressure is built up in the system. If the pump runs continuously, contact Customer Service.

Replacing side brush

➔ Park the sweeper on an even surface.
➔ Set programme switch to step 1 (driving). Side brushes lift up.
➔ Turn main key to "0" and remove it.
➔ Loosen 3 fastening screws on the underside.
➔ Remove the worn side brushes.
➔ Clip new side brushes on to driver and screw on.

Checking roller brush

➔ Park the sweeper on an even surface.
➔ Set programme switch to step 1 (driving). Roller brush is raised.
➔ Turn main key to "0" and remove it.
➔ Secure the machine with wheel chock(s) to prevent it from rolling away.
➔ Raise slightly the waste containers on both sides and pull them out.
➔ Remove belts or cords from roller brush.

Replacing roller brush

Replacement is due if a visible deterioration in sweeping performance caused by bristle wear is evident.

➔ Park the sweeper on an even surface.
➔ Set programme switch to step 1 (driving). Roller brush is raised.
➔ Turn main key to "0" and remove it.
➔ Secure the machine with wheel chock(s) to prevent it from rolling away.
➔ Raise slightly the waste containers on both sides and pull them out.

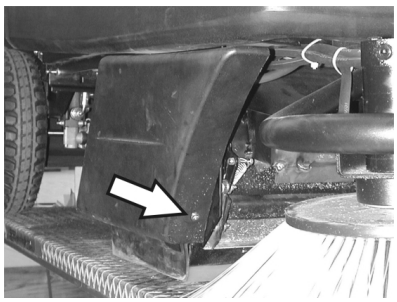

➔ Loosen the front attachment screw of the right-hand side panel.

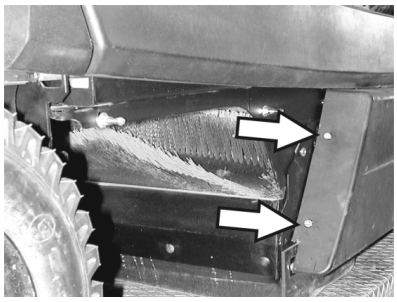

➔ Loosen the rear attachment screw on the right-hand side panel.
➔ Remove side panel.

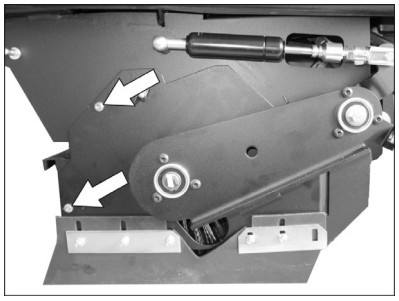

➔ Loosen the screws.

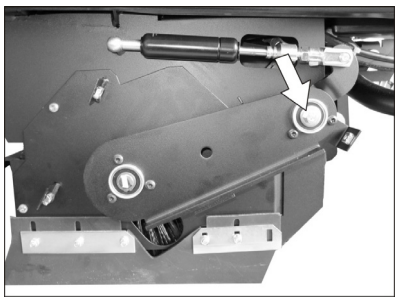

➔ Unscrew the screw on the pivoting point of the roller brush arm.

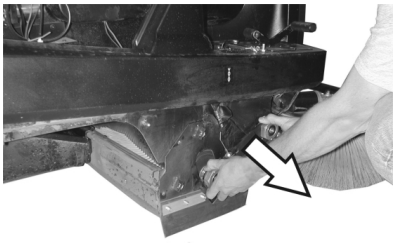

➔ Pull out roller brush swinging arm.

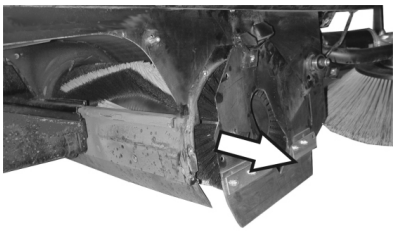

➔ Remove the roller brush cover.
➔ Pull out roller brush.

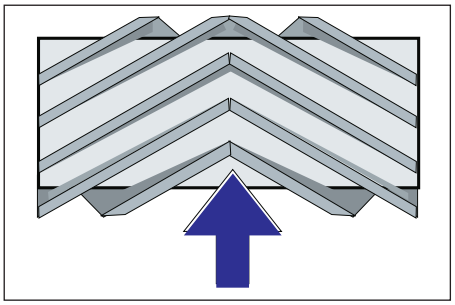

Installation position of roller brush in direction of travel

➔ Push new roller brush into the roller brush housing and onto the drive pin.

Note: When installing the new roller brush, ensure correct positioning of the bristle assembly.

Note: Adjust the bowden cable, so that the roller brush is lifted approx. 10 mm off the floor.

➔ Position roller brush cover.
➔ Install the roller brush arm.
➔ Hook the Bowden cable in.
➔ Tighten the fastening screws.
➔ Screw on side panel.
➔ Push in the waste containers on both the sides and lock them.

Check the sweeping mirror of the sweeping roller

➔ Set programme switch to step 1 (driving). The side brush and roller brush are raised.
➔ Drive sweeper on to a smooth, even surface covered with a visible layer of dust or chalk.
➔ Set programme switch to step 2. Roller brush is lowered. Slightly press down on the drive pedal and allow the sweep brush to briefly rotate.
➔ Raise roller brush.
➔ Press pedal which raises bulk waste flap and keep pressed.
➔ Drive machine backwards.

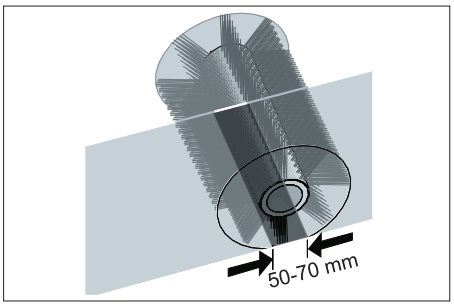

The sweeping track should have an even rectangular shape which is between 50 and 70 mm wide.

Note: The side brush floating mounting of the roller brush adjusts the sweeping track as the bristles wear down. The roller brush must be replaced if it becomes too worn.

Adjusting and replacing sealing strips

➔ Park the sweeper on an even surface.
➔ Set programme switch to step 1 (driving). Roller brush is raised.
➔ Turn main key to "0" and remove it.
➔ Secure the machine with wheel chock(s) to prevent it from rolling away.
➔ Raise slightly the waste containers on both sides and pull them out.
➔ Open the fastening screws of the side panels on both sides.
➔ Remove side panels.

■ **Front sealing strip**

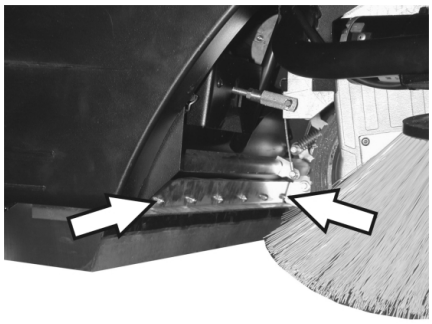

➔ Slightly loosen retaining nuts for the front sealing strip; to replace, unscrew.
➔ Screw on new sealing strip without fully tightening the nuts.

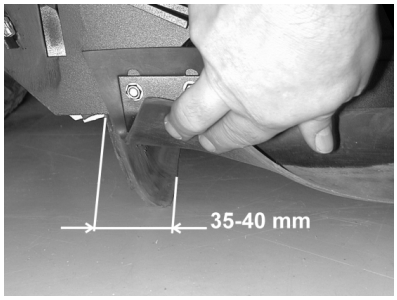

➔ Adjust sealing strip.
➔ Set the distance of the sealing strip to the floor so that the bottom edge trails behind at a distance of between 35 and 40 mm.
➔ Tighten nuts.

■ **Rear sealing strip**

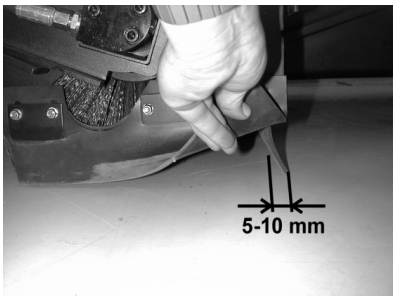

➔ Set the distance between the sealing strip and the floor so that the bottom edge trails behind at a distance of between 5 and 10 mm.
➔ If worn, replace.
➔ Remove roller brush.

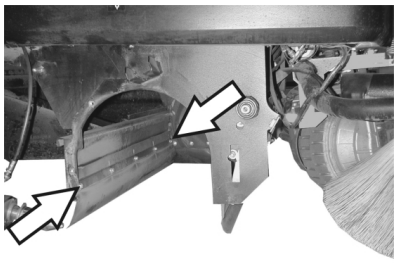

➔ Unscrew retaining nuts for rear sealing strip.
➔ Screw on new sealing strip.

■ **Side sealing strips**

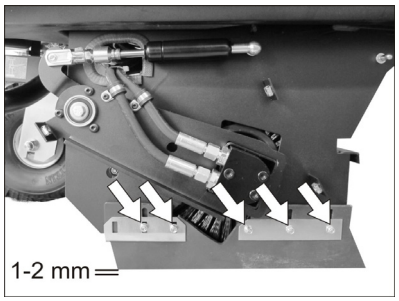

➔ Slightly loosen retaining nuts for the side sealing strip (to replace, unscrew).
➔ Screw on new sealing strip without fully tightening the nuts.
➔ To set the floor clearance, insert a sheet with a thickness of between 1 and 2 mm under the sealing strip.
➔ Adjust sealing strip.
➔ Tighten nuts.
➔ Screw on side panels.
➔ Push in the waste containers on both the sides and lock them.

Replacing dust filter

⚠ ***Warning***

Empty waste container before replacing dust filter. Wear a dust mask when working around the dust filter. Observe safety regulations on the handling of fine particulate material.

➔ Turn main key to "0" and remove it.
➔ Open the hood, insert retaining rod.

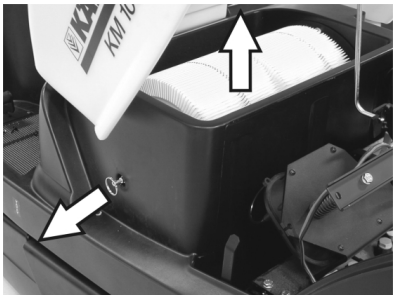

➔ Pull out the filter holder to the maximum possible extent and lock.
➔ Remove the lamella filter.
➔ Insert new filter.

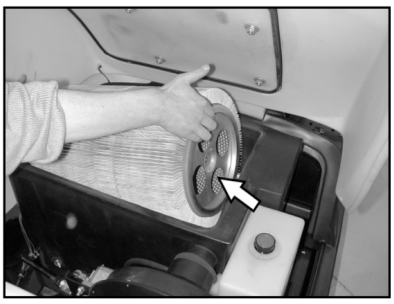

➔ Make sure driver engages with holes on drive side.
➔ Lock the handle of the filter cleaner back into place.

Note: Make sure when installing the new filter that the fins are not damaged.

Replacing filter case seal

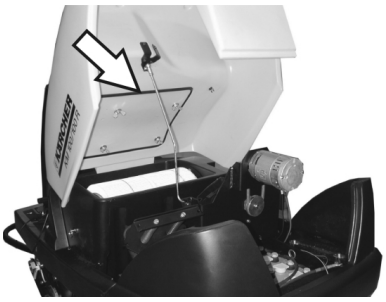

➔ Lift filter case seal out of groove in the cover.
➔ Insert new seal.

Checking drive belt

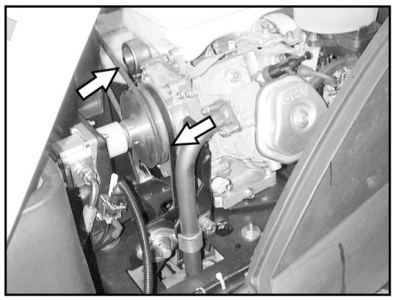

➔ Check tension of drive belt and V-belt of the suction blower, also check for wear or damage.

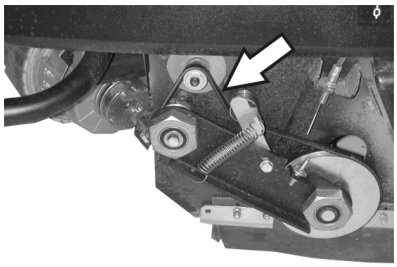

➔ Check tension, wear and damages on the V-belt of the sweep roller drive.

Check cup seal

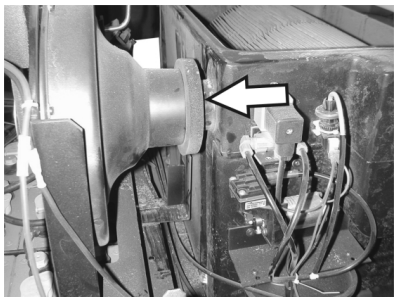

➔ Chek the cup seal at the suction blower regularly to see that it sits properly.

Replacing fuses

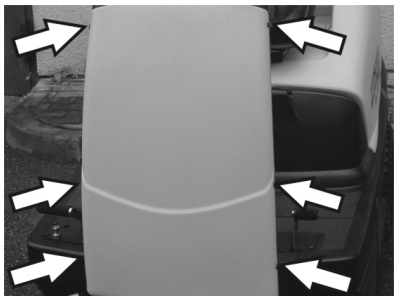

➔ Loosen screws on both sides of the panel.



➔ Replace defective fuses.

➔ Replace front panel.

Note: Only use fuses with identical safety ratings.

Check engine oil level and top up, if required

Note

The engine is equipped with an oil deficiency switch. When the fill level is insufficient, the engine switches off and can only be restarted once the engine oil has been replenished.

⚠ ***Danger***

Risk of burns on account of hot surfaces!

➔ Allow engine to cool down.

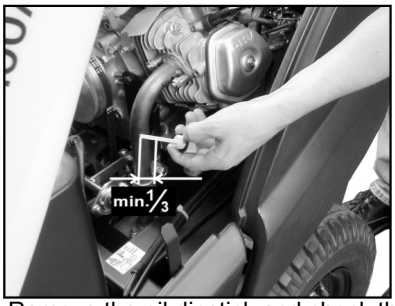

➔ Remove the oil dipstick and check the oil level: Minimum content 1/3.

➔ If the oil level is less than 1/3, top up engine oil until it reaches the lower edge of the filler opening.

➔ Wait at least 5 minutes.

➔ Check engine oil level again.

Change the engine oil

⚠ ***Danger***

Risk of burns on account of hot surfaces!

➔ Pull out oil dipstick.

➔ Draw off engine oil via the oil filler neck using 6.491-538 oil-change pump.

➔ Fill with fresh engine oil via oil filler neck using clean 6.491-538 oil-change pump.

➔ Wait at least 5 minutes.

➔ Check engine oil level again.

Cleaning and replacing the fuel filter



➔ Release the wing nuts on the suction container.

➔ Remove the filter inlay and check it.

➔ Use either a new or cleaned filter cartridge in the vacuum container.

➔ Screw on wing nut.

Clean and replace spark plug

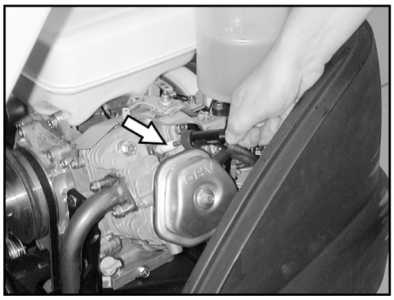

➔ Remove spark-plug connector.

➔ Unscrew and clean or dispose of spark plug.

➔ Screw in cleaned or new spark plug.

➔ Insert the ignition plug into the spark plug.

Check hydraulic oil level and refill hydraulic oil

Note

The machine has two hydraulic circuits:
Circuit sweeping hydraulics

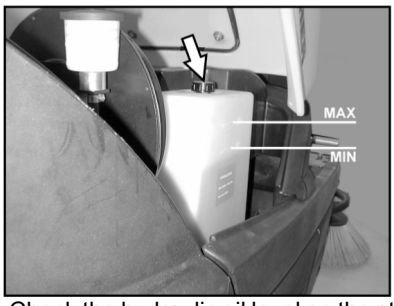

➔ Check the hydraulic oil level on the storage container.
The oil level must lie between “MIN“ and “MAX“ marking.

➔ If the oil level is too low, fill in hydraulic oil above the fill neck on the top of the container.

Circuit axle drive

Caution

This inspection may only be carried out when the engine is cold.



➔ Check oil level in the equalisation container.

➔ If required, top up oil carefully.

Troubleshooting

⚠ ***Danger***
Switch off engine and remove ignition key prior to carrying out any maintenance work.

Risk of injury! Allow the machine sufficient time to cool down before carrying out any maintenance and repair work.

Fault	Remedy
Appliance cannot be started	Sit on the driver seat, the seat contact switch gets activated.
	Check tank contents and oil level; refill oil and fuel.
	Check the fuses.
	Check battery; charge it if required.
	Inform Kärcher Customer Service.
Appliance moves only slowly	Inform Kärcher Customer Service.
Machine is not sweeping properly	Check roller brush and side brushes for wear, replace if necessary.
	Check function of bulk waste flap
	Check sealing strips for wear, adjust or replace as required
	Check belts of sweeping drive.
	Check vacuum pressure system to see it is leak-proof.
	Inform Kärcher Customer Service.
Dust gathers in the machine	Empty waste container
	Check suction fan drive belt
	Check sealing cover on suction fan
	Check dust filter, clean or replace
	Check filter case seal
	Close wet/dry flap
	Check sealing strips for wear, adjust or replace as required
	Inform Kärcher Customer Service.
Side brush does not turn	Check the fuse.
	Inform Kärcher Customer Service.
Poor cleaning performance at edges	Replace side brush
	Check sealing strips for wear, adjust or replace as required
	Inform Kärcher Customer Service.
Side brush or roller brush switch-on operation is not working	Check vacuum pressure system to see it is leak-proof.
	Inform Kärcher Customer Service.
Insufficient vacuum performance	Check filter case seal
	Check sealing cover on suction fan
	Check hoses of suction blower for absence of leakness.
	Insert lamella filter correct; see Changing dust filter
	Inform Kärcher Customer Service.
Roller brush does not turn.	Remove belts or cords from roller brush
	Inform Kärcher Customer Service.

Technical specifications

		KM 100/100 R P	KM 100/100 R LPG
Machine data			
Length x width x height	mm	2006 x 1005 x 1343	2006 x 1005 x 1343
Unladen weight	kg	300	300
Transport weight	kg	375	375
Permissible overall weight	kg	520	520
Driving speed	km/h	8	8
Cleaning speed	km/h	6	6
Climbing capability (max.)	%	18	18
Roller brush diameter	mm	285	285
Roller brush width	mm	710	710
Side brush diameter	mm	450	450
Working width without side brushes	mm	710	710
Working width with 1 side brushes	mm	1000	1000
Working width with 2 side brushes (option)	mm	1290	1290
Volume of waste container	l	100	100
Protection type, drip-proof	--	IPX 3	IPX 3
Engine			
Type	--	Honda, 1 cyl., four-stroke	Honda, 1 cyl., four-stroke
Cylinder capacity	cm^3	270	270
Max. power	kW/HP	6,6 / 9	6,6 / 9
Maximum torque at 2500 rpm	Nm	19	19
Fuel type	--	Petrol, unleaded	Liquid gases (propellants): Butane and propane or a mixture of butane/propane RON 95 / EN 589
Tank content	--	6 l	11 kg / 20 litres (replacement cylinder)
Spark plug, NGK	--	BPR 6 ES	BPR 6 ES
Type of protection	--	IP22	IP22
Battery			
Type	--	12V, 44Ah	12V, 44Ah
Oil grades			
Motor	--	SAE 15W40	SAE 15W40
Sweeping hydraulics	--	HVLP 46	HVLP 46
Axle drive	--	SAE 10W-60	SAE 10W-60
Tyres			
Size, front	--	4.00-4	4.00-4
Air pressure, front	bar	6	6
Size, rear	--	4.00-8	4.00-8
Air pressure, rear	bar	6	6
Brake			
Service brake	--	hydrostatic	hydrostatic
Parking brake	--	automatic (with spring)	automatic (with spring)
Filter and vacuum system			
Filter surface area, fine dust filter	m^2	6,0	6,0
Category of use – filter for non-hazardous dust	--	U	U
Nominal vacuum, suction system	mbar	12	12
Nominal volume flow, suction system	l/s	50	50
Working conditions			
Temperature	°C	-5...+40	-5...+40

Air humidity, non-condensing	%	20 - 90	20 - 90
Values determined as per EN 60335-2-72			
Noise emission			
Sound pressure level L_{pA}	dB(A)	79	79
Uncertainty K_{pA}	dB(A)	2	2
Sound power level L_{WA} + Uncertainty K_{WA}	dB(A)	98	98
Machine vibrations			
Hand-arm vibration value	m/s^2	<2,5	<2,5
Seat	m/s^2	1,3	1,3
Uncertainty K	m/s^2	0,2	0,2

EC Declaration of Conformity

We hereby declare that the machine described below complies with the relevant basic safety and health requirements of the EU Directives, both in its basic design and construction as well as in the version put into circulation by us. This declaration shall cease to be valid if the machine is modified without our prior approval.

Product: Ride-on vacuum sweeper
Type: 1.280-xxx

Relevant EU Directives
2006/42/EC (+2009/127/EC)
2004/108/EC
2000/14/EC
Applied harmonized standards
EN 55012: 2007 + A1: 2009
EN 60335–1
EN 60335–2–72
EN 61000–6–2: 2005
EN 62233: 2008
Applied conformity evaluation method
2000/14/EC: Appendix V
Sound power level dB(A)
KM 100/100 R P
Measured: 95
Guaranteed: 98
KM 100/100 R LPG
Measured: 95
Guaranteed: 98

The undersigned act on behalf and under the power of attorney of the company management.

H. Jenner
CEO

i.V. Reiser
S. Reiser
Head of Approbation

Authorised Documentation Representative
S. Reiser

Alfred Kärcher GmbH Co. KG
Alfred-Kärcher-Str. 28 - 40
71364 Winnenden (Germany)
Phone: +49 7195 14-0
Fax: +49 7195 14-2212

Winnenden, 2012/04/01

Warranty

The warranty terms published by the relevant sales company are applicable in each country. We will repair potential failures of your appliance within the warranty period free of charge, provided that such failure is caused by faulty material or defects in manufacturing. In the event of a warranty claim please contact your dealer or the nearest authorized Customer Service centre. Please submit the proof of purchase.

Accessories

Side brushes	**6.905-986.0**
With standard bristles for indoor and outdoor areas.	

Side-brushes, soft	**6.906-133.0**
For fine dust on inside surfaces; wetness resistant.	

Hard side-brushes	**6.906-065.0**
For removing stubborn dirt in the external area; resistant to moisture.	

Standard sweep roller	**6.906-375.0**
Resistant of wear and moisture. Universal bristles for inside and outside cleaning.	

Roller-brush, soft	**6.906-533.0**
With natural bristles especially for fine dust sweeping on smooth indoor floors. Not resistant to wetness; not for abrasive surfaces.	

Roller-brush, hard	**6.906-532.0**
For removing stubborn dirt in the external area; resistant to moisture.	

Dust filter	**6.414-532.0**

1.280-105.0
1.280-107.0

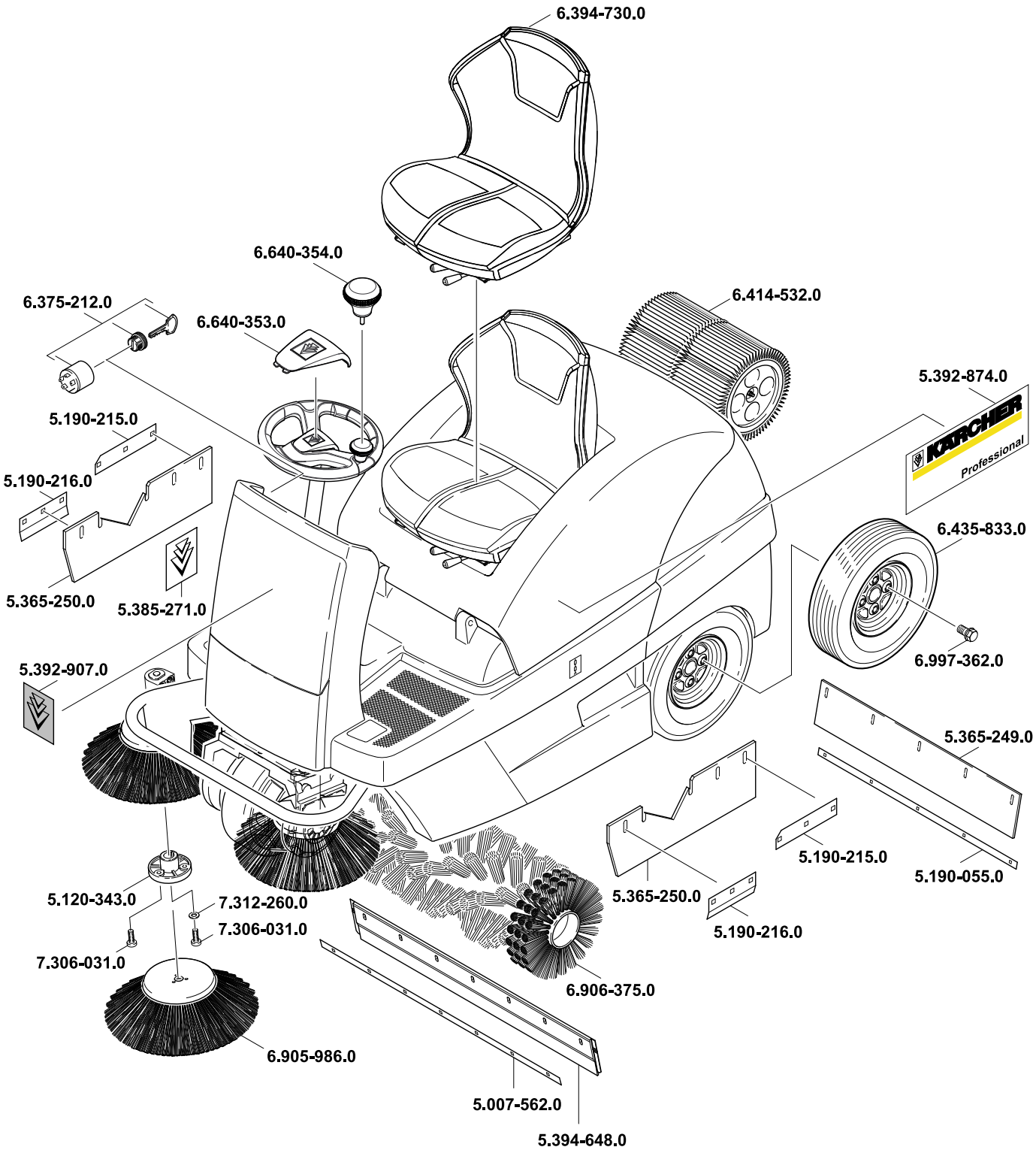

AE Karcher FZE, P.O. Box 17416, Jebel Ali Free Zone (South), Dubai, United Arab Emirates,
☎+971 4 886-1177, www.kaercher.com

AR Kärcher S.A., Urugguay 2887 (1646) San Fernando, Pcia. de Buenos Aires
☎+54-11 4506 3343, www.karcher.com.ar

AT Alfred Kärcher Ges.m.b.H., Lichtblaustraße 7, 1220 Wien,
☎+43-1-25060-0, www.kaercher.at

AU Kärcher Pty. Ltd., 40 Koornang Road, Scoresby VIC 3179, Victoria,
☎+61-3-9765-2300, www.karcher.com.au

BE Kärcher N.V., Industrieweg 12, 2320 Hoogstraten,
☎+32-3-340 07 11, www.karcher.be

BR Kärcher Indústria e Comércio Ltda., Av. Professor Benedicto Montenegro no 419, Betel, Paulínia - Estado de Sao Paulo, CEP 13.140-000
☎+55-19-3884-9100, www.karcher.com.br

CA Kärcher Canada Inc., 6535 Millcreek Road, Unit 67, Mississauga, ON, L5N 2M2,
☎+1-905-672-8233, www.karcher.ca

CH Kärcher AG, Industriestrasse, 8108 Dällikon, Kärcher SA, Croix du Péage, 1029 Villars-Ste-Croix,
☎0844 850 864, www.kaercher.ch

CN Kärcher (Shanghai) Cleaning Systems, Co., Ltd., Part F, 2nd Floor, Building 17, No. 33, XI YA Road, Waigaogiao Free Trade, Pudong, Shanghai, 200131
☎+86-21 5076 8018, www.karcher.cn

CZ Kärcher spol. s r.o., Modletice c.p. 141, CZ-251 01 Ricany,
☎+420/323/606 014, www.kaercher.cz

DE Alfred Kärcher Vertriebs-GmbH, Friedrich-List-Straße 4, 71364 Winnenden,
☎+49-7195/903-0, www.kaercher.de

DK Kärcher Rengøringssystemer A/S, Helge Nielsens Alle 7 A, 8723 Løsning,
☎+45-70206667, www.karcher.dk

ES Kärcher, S.A., Pol. Industrial Font del Radium, Calle Josep Trueta, 6-7, 08403 Granollers (Barcelona),
☎+34-902 17 00 68, www.karcher.es

F Kärcher S.A.S., Z.A. des Petits Carreaux, 5, avenue des Coquelicots, 94865 Bonneuil-sur-Marne,
☎+33-1-4399-6770, www.karcher.fr

FI Kärcher OY, Yrittäjäntie 17, 01800 Klaukkala,
☎+358-207 413 600, www.karcher.fi

GB Kärcher (U.K.) Ltd., Kärcher House, Beaumont Road, Banbury, Oxon OX16 1TB,
☎+44-1295-752-000, www.karcher.co.uk

GR Kärcher Cleaning Systems A.E., 31-33, Nikitara str. & Konstantinoupoleos str., 136 71 Aharnes,
☎+30-210-2316-153, www.karcher.gr

HK Kärcher Limited, Unit 10, 17/F., Apec Plaza, 49 Hoi Yuen Road, Kwun Tong, Kowloon,
☎++(852)-2357-5863, www.karcher.com.hk

HU Kärcher Hungaria KFT, Tormásrét ut 2., (Vendelpark), 2051 Biatorbagy,
☎+36-23-530-64-0, www.kaercher.hu

I Kärcher S.p.A., Via A. Vespucci 19, 21013 Gallarate (VA),
☎+39-848-998877, www.karcher.it

IE Kärcher Limited (Ireland), C1 Centrepoint Business Park, Oak Road, Dublin 12,
☎(01) 409 7777, www.kaercher.ie

JP Kärcher (Japan) Co., Ltd., Irene Kärcher Building, No. 2, Matsus-aka-Daira 3-chome, Taiwa-cho, Kurokawa-gun, Miyagi 981-3408,
☎+81-22-344-3140, www.karcher.co.jp

KR Karcher (Korea) Co. Ltd., 162 Gukhoe-daero, (872-2 Sinjeong-Dong), Seoul, Korea
☎02-322 6588, A/S. 1544-6577, www.karcher.co.kr

LV Karcher SIA, Mārupes nov., Mārupe, Kārļa Ulmaņa gatve 101, Rīga, LV-1046
☎+371-67 80 87 07

MX Karcher México, SA de CV, Av. Gustavo Baz No. 29-C, Col. Nau-calpan Centro, Naucalpan, Edo. de México, C.P. 53000 México,
☎+52-55-5357-04-28, www.karcher.com.mx

MY Karcher Cleaning Systems Sdn. Bhd., 71 & 73 Jalan TPK 2/8, Taman Perindustrian Kinrara, Seksyen 2, 47100 Puchong, Selangor Darul Ehsan
☎+603 8073 3000, www.karcher.com.my

NL Kärcher B.V., Postbus 474, 4870 AL Etten-Leur,
☎0900-33 666 33, www.karcher.nl

NO Kärcher AS, Stanseveien 31, 0976 Oslo, Norway,
☎+47 815 20 600, www.karcher.no

NZ Karcher Limited, 12 Ron Driver Place, East Tamaki, Auckland, New Zealand,
☎+64 (9) 274-4603, www.karcher.co.nz

PL Kärcher Sp. z o.o., Ul. Stawowa 140, 31-346 Kraków,
☎+48-12-6397-222, www.karcher.pl

RO Karcher Romania srl, Sos. Odaii 439, Sector 1, RO-013606 BUKAREST,
☎+40 37 2709001, www.kaercher.ro

RU Karcher Ltd. Service Center, 105082, Москва, ул. Б.Почтовая, д. 40
☎+7-495 789 90 76, www.karcher.ru

SE Kärcher AB, Tagenevägen 31, 42502 Hisings-Kärra,
☎+46 (0)31-577 300, www.karcher.se

SGP Karcher South East Asia Pte. Ltd., 5 Toh Guan Road East, #01-00 Freight Links Express Distripark, Singapore 608831,
☎+65-6897-1811, www.karcher.com.sg

SK Kärcher Slovakia, s.r.o., Beniakova 2, SK-94901 NITRA,
☎+421 37 6555 798, www.kaercher.sk

TR Kärcher Servis Ticaret A.S., Mahmutbey Mahallesi İstoç, Petrol Plaza C-Blok Kat: 2-3, Bağcılar, 34218 Istanbul
☎+90-212-659-43 69, www.karcher.com.tr

TW Karcher Limited, 7/F, No. 66, Jhongijheng Rd., Sinjhuang City, Taipei County 24243, Taiwan,
☎+886-2-2991-5533, +886-800-666-825, www.karcher.com.tw

UA Kärcher Ltd., Petropavlivska Str., 4, Petropavlivska Borschagiv-ka, Kyiv region, 08130,
☎+380 44 594 7576, www.karcher.com.ua

USA To locate your local dealer please visit our web site at http://www.karchercommercial.com or call us at 888.805.9852

ZA Kärcher (Pty) Ltd., 144 Kuschke Street, Meadowdale, Edenvale, 1614,
☎+27-11-574-5360, www.karcher.co.za